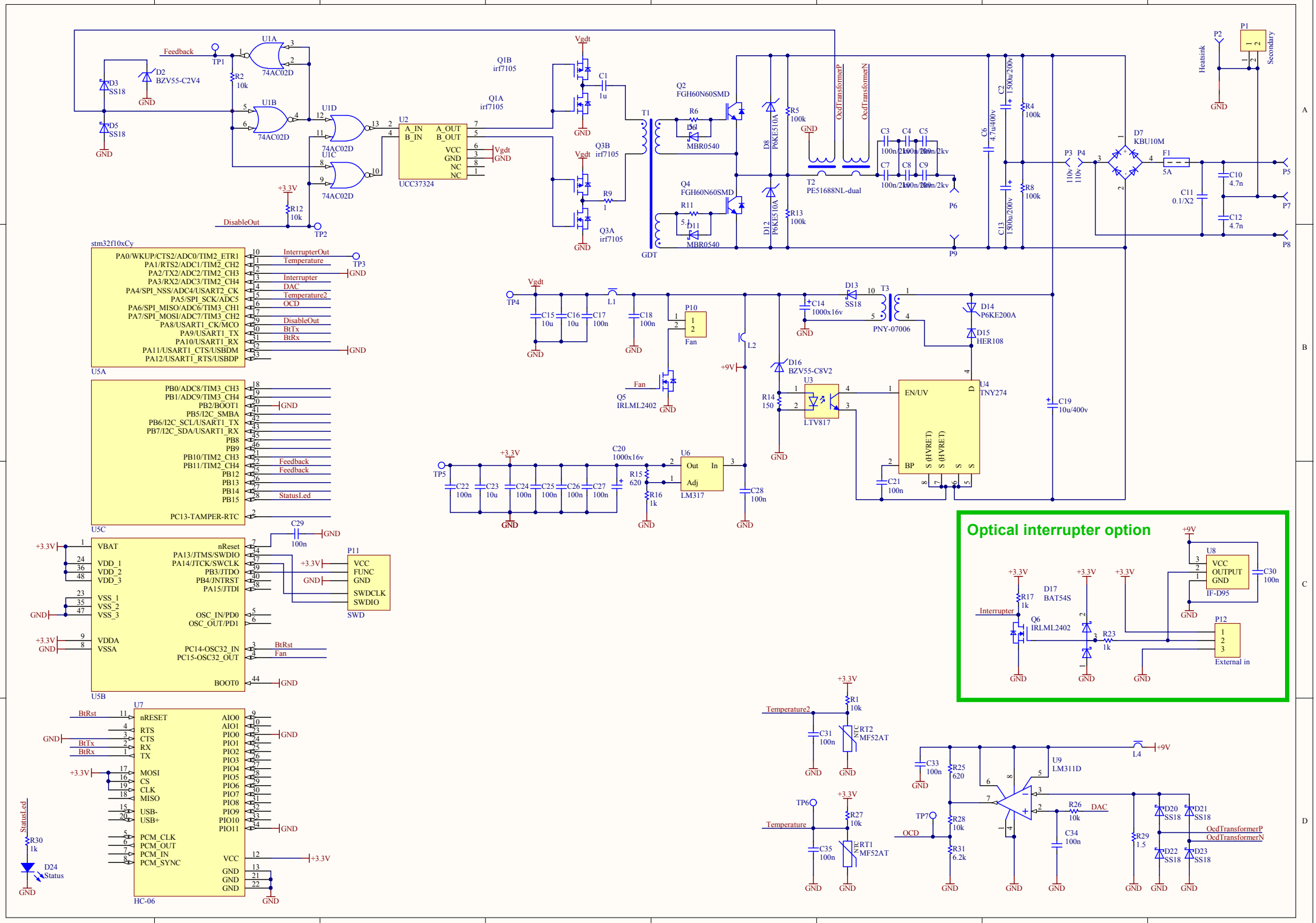
Feedback
TP1
U1A
74AC02D
D2
BZV55-C2V4
D3
SS18
D5
SS18
GND
R2
10k
U1B
U1D
U1C
+3.3V
R12
10k
DisableOut
TP2
U2
A_IN
B_IN
A_OUT
B_OUT
VCC
GND
NC
UCC37324
Vgdt
Q1B
irf7105
Q1A
irf7105
C1
1u
Q3B
irf7105
R9
1
Q3A
irf7105
T1
GDT
Q2
FGH60N60SMD
R6
Q4
FGH60N60SMD
R11
5.1
D11
MBR0540
D8
P6KE510A
D12
P6KE510A
R5
100k
R13
100k
OcdTransformerP
OcdTransformerN
T2
PE51688NL-dual
C3
C4
C5
C7
C8
C9
100n/2kv
P6
P9
C6
4.7u/400v
C2
1500u/200v
C13
1500u/200v
R4
100k
R8
100k
P3
P4
110v
D7
KBU10M
F1
5A
C11
0.1/X2
C10
4.7n
C12
4.7n
P5
P7
P8
Heatsink
P2
P1
Secondary
stm32f10xCy
PA0/WKUP/CTS2/ADC0/TIM2_ETR1
PA1/RTS2/ADC1/TIM2_CH2
PA2/TX2/ADC2/TIM2_CH3
PA3/RX2/ADC3/TIM2_CH4
PA4/SPI_NSS/ADC4/USART2_CK
PA5/SPI_SCK/ADC5
PA6/SPI_MISO/ADC6/TIM3_CH1
PA7/SPI_MOSI/ADC7/TIM3_CH2
PA8/USART1_CK/MCO
PA9/USART1_TX
PA10/USART1_RX
PA11/USART1_CTS/USBDM
PA12/USART1_RTS/USBDP
InterrupterOut
Temperature
TP3
Interrupter
DAC
Temperature2
OCD
DisableOut
BtTx
BtRx
U5A
PB0/ADC8/TIM3_CH3
PB1/ADC9/TIM3_CH4
PB2/BOOT1
PB5/I2C_SMBA
PB6/I2C_SCL/USART1_TX
PB7/I2C_SDA/USART1_RX
PB8
PB9
PB10/TIM2_CH3
PB11/TIM2_CH4
PB12
PB13
PB14
PB15
Feedback
Feedback
StatusLed
PC13-TAMPER-RTC
U5C
TP4
C15
10u
C16
10u
C17
100n
L1
C18
100n
P10
Fan
Q5
IRLML2402
L2
+9V
D13
SS18
T3
PNY-07006
C14
1000x16v
D14
P6KE200A
D15
HER108
D16
BZV55-C8V2
R14
150
U3
LTV817
U4
TNY274
EN/UV
BP
S (HVRET)
D
C19
10u/400v
C21
100n
TP5
C22
100n
C23
10u
C24
100n
C25
100n
C26
100n
C27
100n
C20
1000x16v
R15
620
R16
1k
U6
Out
In
Adj
LM317
C28
100n
C29
100n
VBAT
VDD_1
VDD_2
VDD_3
VSS_1
VSS_2
VSS_3
VDDA
VSSA
nReset
PA13/JTMS/SWDIO
PA14/JTCK/SWCLK
PB3/JTDO
PB4/JNTRST
PA15/JTDI
OSC_IN/PD0
OSC_OUT/PD1
PC14-OSC32_IN
PC15-OSC32_OUT
BtRst
Fan
BOOT0
U5B
P11
VCC
FUNC
GND
SWDCLK
SWDIO
SWD
U7
nRESET
RTS
CTS
RX
TX
MOSI
CS
CLK
MISO
USB-
USB+
PCM_CLK
PCM_OUT
PCM_IN
PCM_SYNC
AIO0
AIO1
PIO0
PIO1
PIO2
PIO3
PIO4
PIO5
PIO6
PIO7
PIO8
PIO9
PIO10
PIO11
VCC
HC-06
R30
1k
D24
Status
Optical interrupter option
U8
VCC
OUTPUT
GND
IF-D95
C30
100n
D17
BAT54S
R17
1k
Interrupter
Q6
IRLML2402
R23
1k
P12
External in
R1
10k
Temperature2
C31
100n
RT2
MF52AT
NTC
TP6
Temperature
R27
10k
C35
100n
RT1
MF52AT
C33
100n
R25
620
U9
LM311D
L4
R26
10k
DAC
C34
100n
TP7
OCD
R28
10k
R31
6.2k
R29
1.5
D20
SS18
D21
SS18
D22
SS18
D23
SS18
OcdTransformerP
OcdTransformerN